CEAG Products
Ex-emergency lighting

CROUSE-HINDS
SERIES

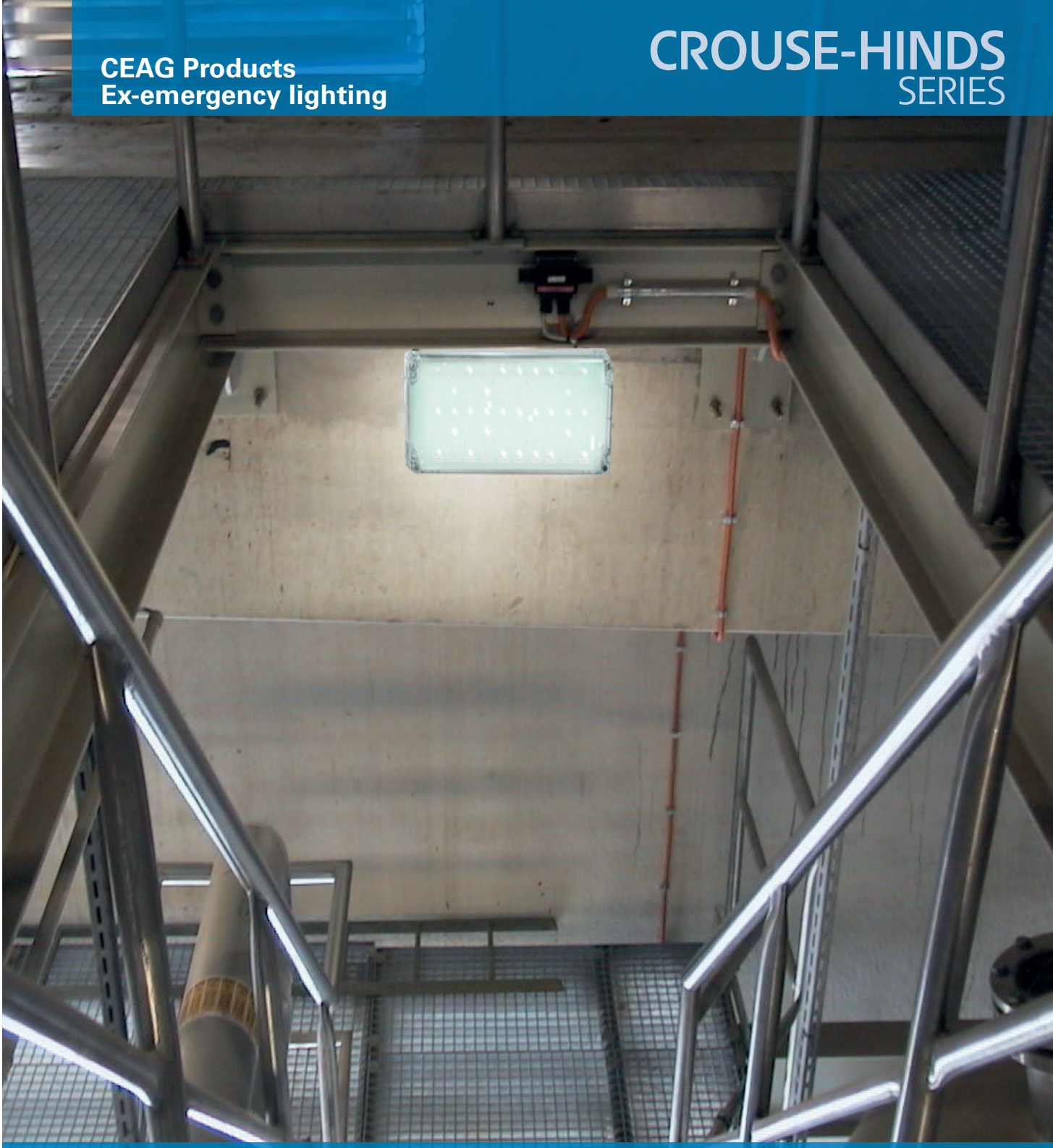

# EXIT Clear / EXIT Clear2

Explosion protected safety luminaire for Zone 1/2 und 21/22

EATON
Powering Business Worldwide

# Explosion protected safety luminaire EXIT Clear / EXIT Clear2

Zone 1/21 and 2/22

**Leading the way in hazardous areas**

The EXIT Clear series of explosion-protected safety luminaires fulfils the requirements of ATEX Directive 2014/34/EU and EN 60598, Section 2.22 for safety lighting luminaires. The luminaires are suited for lighting up escape routes in hazardous areas. The EXIT Clear in the version as mains luminaire can also be used for signalling purposes.

Only white, high-efficiency LEDs are used as illuminants for these luminaires. This guarantees maintenance free operation, as the illuminants do not need replacing throughout the complete service life of the luminaire.

The supply electronics is also laid out for this service life; the LED circuits are intrinsically safe.

The wide input voltage range allows international use. The housing of these luminaires is made of high-grade polycarbonate.

Thanks to the robust design and high degree of protection, these luminaires are suited for both indoor and outdoor use.

As an safety lighting luminaire with self-contained battery system for maintained operation, the EXIT Clear N and the EXIT Clear2 N feature a NC battery and automatic function monitoring with operating time test.

With the optional built-in V-CG-S monitoring module with coding switch for max. 20 addresses, this luminaire can also be used as an individually monitored safety luminaire that is connected to a CEAG emergency lighting supply system. With this, the operator can programme the switching mode according to the respective requirements. Thus, as many as 20 luminaires with different switching modes can be connected to one end circuit.

**Features**

- Power-saving LED technology, maintenance-free throughout service life
- High degree of protection IP66
- For ceiling and wall mounting
- Luminaire with self-contained battery unit and automatic function monitoring (N)
- Connection and monitoring with CEAG emergency lighting supply systems possible (V-CG-S)

### For all types of application

The escape sign luminaires of the "EXIT Clear" series are available as mains luminaires "EXIT Clear" and "EXIT Clear2", e.g. for specially safeguarded industrial networks in production plants, as "EXIT Clear V-CG-S" and "EXIT Clear2 V-CG-S" emergency lighting luminaires with individual function monitoring for use in CEAG emergency lighting supply systems, as well as "EXIT Clear N" and "EXIT Clear2 N" safety luminaires with self-contained battery systems and automatic function and operating time tests.

### Safe light for all zones

On account of the robust, all-plastic polycarbonate housing in the high degree of protection IP66, the EXIT Clear luminaire can be installed almost anywhere, both indoors and out. The luminaire is designed in the type of protection Ex e m ib IIC up to T6 as well as Ex tb IIIC T80 °C and, in accordance with the ATEX Directive. It can be used in hazardous areas with explosive gas atmospheres (Zones 1 and 2) and explosive dust atmospheres (Zones 21 and 22). The EXIT Clear2 series can be used in hazardous areas with explosive gas atmospheres (Zones 2) and explosive dust atmospheres (Zones 22).

### Maintenance-free operation

The white LED technology used as the light source allows maintenance-free operation without replacement of the illuminant. The lighting values required for the escape sign are maintained throughout the complete service life of the LEDs, namely approx. 50,000 hours. It goes without saying that the supply electronics are also designed for this extremely long operating time. This reduces operating costs and increases the operating safety considerably, in particular in locations that are difficult to access.

### For international use

The LED safety luminaire of the EXIT series was designed to meet the requirements of a large number of different safety concepts. Thanks to the wide input voltage range from 110 V to 277 V AC and up to 250 V DC, this luminaire can be used internationally, whereby the supply circuits of the LED circuits are intrinsically safe.

The internationally valid certificate "IECEx" enhances the scope of this light fitting.

### Double safety

Whenever the operational safety of explosion- protected safety luminaires is involved, there is no room for compromises, as only a luminaire that is fully functional at all times can save human lives. The new series of explosion-protected LED safety luminaires not only fulfils the extremely high explosion protection requirements, but it also fulfils the legal requirements for safety lighting installations. The EXIT Clear is capable of safely lighting up the way to go at all times, even in complex and often badly laid out industrial installations with hazardous areas.

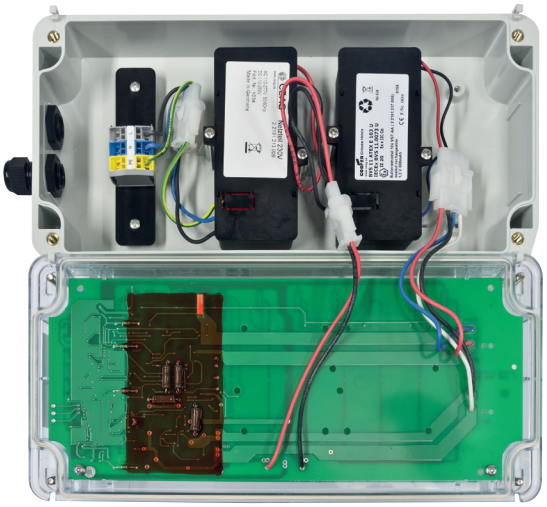

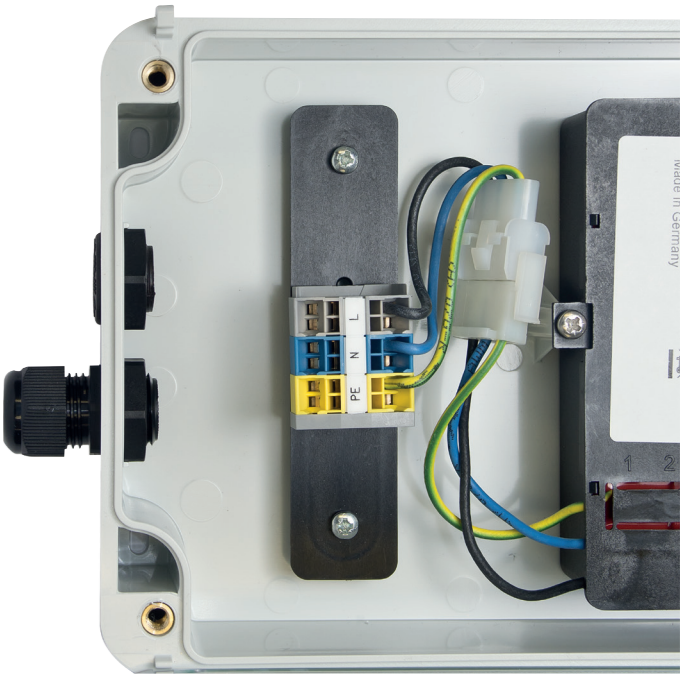


pluggable connection for an easy replacement of components

# Ordering details / Accessories

EXIT Clear / EXIT Clear2

## Ordering details

| Type<br>Exit Clear<br>for Zone 1/21 | Scope of delivery | Cable gland/Thread<br>Plastic cable glands M20 | Screw plug M20 | Metal thread M20 | Order No. |
|---|---|---|---|---|---|
| EXIT Clear | including cover | 1 x M20 | 1 x M20 | | **1 2191 000 004** |
| | including cover | | | 2 x M20 | **1 2191 000 104** |
| EXIT Clear 24 V | including cover | 1 x M20 | 1 x M20 | | **1 2191 024 004** |
| | including cover | | | 2 x M20 | **1 2191 024 104** |
| EXIT Clear N | including cover | 1 x M20 | 1 x M20 | | **1 2191 030 004** |
| | including cover | | | 2 x M20 | **1 2191 030 104** |
| EXIT Clear V-CG-S | including cover | 1 x M20 | 1 x M20 | | **1 2191 020 004** |
| | including cover | | | 2 x M20 | **1 2191 020 104** |

| Type<br>Exit Clear2<br>for Zone 2/22 | Scope of delivery | Cable gland/Thread<br>Plastic cable glands M20 | Screw plug M20 | Metal thread M20 | Order No. |
|---|---|---|---|---|---|
| EXIT Clear2 | including cover | 1 x M20 | 1 x M20 | | **1 2193 000 004** |
| | including cover | | | 2 x M20 | **1 2193 000 104** |
| EXIT Clear2<br>24 V | including cover | 1 x M20 | 1 x M20 | | **1 2193 024 004** |
| | including cover | | | 2 x M20 | **1 2193 024 104** |
| EXIT Clear2 N | including cover | 1 x M20 | 1 x M20 | | **1 2193 030 004** |
| | including cover | | | 2 x M20 | **1 2193 030 104** |
| EXIT Clear2 V-CG-S | including cover | 1 x M20 | 1 x M20 | | **1 2193 020 004** |
| | including cover | | | 2 x M20 | **1 2193 020 104** |

A wide selection of cable glands can be found at www.crouse-hinds.de/products or in the catalogue Part 2, Section 3.

**EXIT Clear / EXIT Clear2**

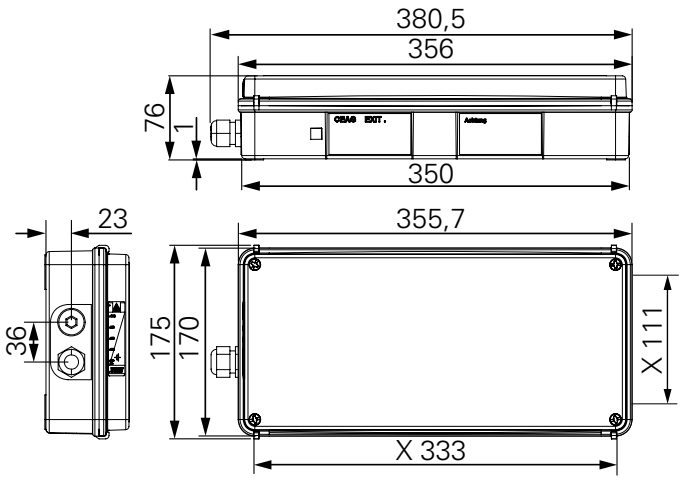


Dimensions in mm

X = Fixing Dimensions

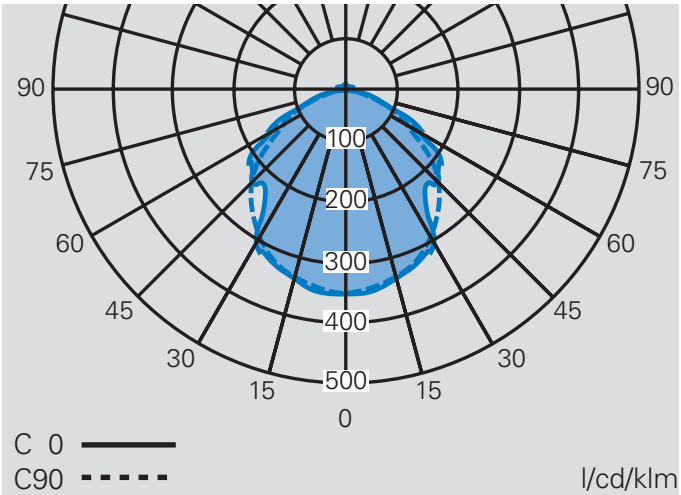


**Polar curve EXIT Clear / EXIT Clear2**

# Technical data

EXIT Clear Ex safety luminaire for Zone 1 and 2

## Technical data

| | EXIT Clear / EXIT Clear 24 V | EXIT Clear N | EXIT Clear V-CG-S |
|---|---|---|---|
| EC-Type Examination Certificate | BVS 09 ATEX E 029 | BVS 09 ATEX E 029 | BVS 09 ATEX E 029 |
| IECEx Certificate of Conformity | IECEx BVS 13.0017 | IECEx BVS 13.0017 | IECEx BVS 13.0017 |
| Marking accd. to 2014/34/EU | Ⓔx II 2 G Ex e ib mb IIC T6/T5 Gb<br>Ⓔx II 2 D Ex tb IIIC T80°C Db | Ⓔx II 2 G Ex e ib mb IIC T5/T4 Gb<br>Ⓔx II 2 D Ex tb IIIC T80°C Db" | Ⓔx II 2 G Ex e ib mb IIC T6/T5 Gb<br>Ⓔx II 2 D Ex tb IIIC T80°C Db |
| Marking accd. to IECEx | Ex e ib mb IIC T6/T5 Gb<br>Ex tb IIIC T80°C Db | Ex e ib mb IIC T5/T4 Gb<br>Ex tb IIIC T80°C Db | Ex e ib mb IIC T6/T5 Gb<br>Ex tb IIIC T80°C Db |
| Permissible ambient temperature<br><br>specified data | -20 °C up to +40°C (T6)<br>-20 °C up to +50°C (T5) | -20 °C up to +40°C (T5)<br>-20 °C up to +50°C (T4)<br>+5 °C up to +35 °C | -20 °C up to +40°C (T6)<br>-20 °C up to +50°C (T5) |
| Battery | | 12 V/800 mAh NC-Accu | |
| Rated power consumption | approx. 6 VA | approx. 10 VA | approx. 6 VA |
| Rated voltage | 110 V - 277 V AC<br>110 V - 250 V DC | 110 V - 277 V AC<br>110 V - 250 V DC | 220 V - 254 V AC<br>195 V - 250 V DC |
| Rated voltage EXIT 24 V | 12 - 24 V DC (-15 % / + 20 %) | | |
| Rated current AC/DC | 220 V = 20 mA,<br>110 V = 40 mA | 230 V ≃ 50 mA,<br>110 V ≃100 mA | 220 V = 20 mA,<br>110 V = 40 mA |
| Frequency | DC and 50 - 60 Hz (AC) | DC and 50 - 60 Hz (AC) | DC and 50 - 60 Hz (AC) |
| Charging duration for capacity > 90 % | | 24 h | |
| Power factor cos φ | ≥ 0.95 | ≃ 0.5 | ≥ 0.95 |
| Circuit | electronic power supply | electronic power supply | electronic power supply |
| Protection class | I | I | I |
| Rated luminous flux | 166 lm | 166 lm | 166 lm |
| Lamp / Illuminant | high output-LEDs, white | high output-LEDs, white | high output-LEDs, white |
| Rated emergency lighting duration | | approx. 3 h | |
| Dimensions (L x W x H) | 356 x 175 x 76 mm | 356 x 175 x 76 mm | 356 x 175 x 76 mm |
| Connecting terminals | 3 x loop terminal 2.5 mm² [1)] | 3 x loop terminal 2.5 mm² [1)] | 3 x loop terminal 2.5 mm² [1)] |
| Enclosure colour | grey, RAL 7035 | grey, RAL 7035 | grey, RAL 7035 |
| Enclosure material | Polycarbonate | Polycarbonate | Polycarbonate |
| Weight | 2 kg | 2.5 kg | 2.2 kg |
| Cable glands / gland plates / enclosure drilling | 1 x Ex-e cable glands M20 x 1.5 (plastic) /<br>1 x Ex-e-screw plug M20 or<br>2 x M20 x1.5 metal thread,<br>1 x screw plug M20 | 1 x Ex-e cable glands M20 x 1.5 (plastic) /<br>1 x Ex-e-screw plug M20 or<br>2 x M20 x1.5 metal thread,<br>1 x screw plug M20 | 1 x Ex-e cable glands M20 x 1.5 (plastic) /<br>1 x Ex-e-screw plug M20 or<br>2 x M20 x1.5 metal thread,<br>1 x screw plug M20 |
| Type of mounting | wall/ceiling mounting | wall/ceiling mounting | wall/ceiling mounting |
| Degree of protection accd. to EN 60529 | IP66 | IP66 | IP66 |
| Protective cover / protective bowl | Polycarbonate | Polycarbonate | Polycarbonate |

[1)] Option: 3 x 4 mm² screw terminals

# Technical Data

EXIT Clear2 Ex Safety luminaire for Zone 2/22

## Technical data

| | EXIT Clear2/ EXIT Clear2 24 V | EXIT Clear2 N | EXIT Clear2 V-CG-S |
|---|---|---|---|
| Type Examination Certificate | BVS 15 ATEX E 074 | BVS 15 ATEX E 074 | BVS 15 ATEX E 074 |
| IECEx Certificate of Conformity | IECEx BVS 15.0065 | IECEx BVS 15.0065 | IECEx BVS 15.0065 |
| Marking accd. to 2014/34/EU | Ⓔx II 3 G Ex e ic mc IIC T6/T5 Gc<br>Ⓔx II 3 D Ex tc IIIC T80°C Dc | Ⓔx II 3 G Ex e ic mc IIC T5/T4 Gc<br>Ⓔx II 3 D Ex tc IIIC T80°C Dc | Ⓔx II 3 G Ex e ic mc IIC T6/T5 Gc<br>Ⓔx II 3 D Ex tc IIIC T80°C Dc |
| Marking accd. to IECEx | Ex e ic mc IIC T6/T5 Gc<br>Ex tc IIIC T80°C Dc | Ex e ic mc IIC T6/T5 Gc<br>Ex tc IIIC T80°C Dc | Ex e ic mc IIC T6/T5 Gc<br>Ex tc IIIC T80°C Dc |
| Permissible ambient temperature<br><br>specified data | -20 °C up to +40°C (T6)<br>-20 °C up to +50°C (T5) | -20 °C up to +40°C (T5)<br>-20 °C up to +50°C (T4)<br>+5 °C up to +35 °C | -20 °C up to +40°C (T6)<br>-20 °C up to +50°C (T5) |
| Battery | | 12 V/800 mAh NC-Accu | |
| Rated power consumption | approx. 6 VA | approx. 10 VA | approx. 6 VA |
| Rated voltage | 110 V - 277 V AC / 110 V - 250 V DC | 110 V - 277 V AC<br>110 V - 250 V DC | 220 V - 254 V AC<br>195 V - 250 V DC |
| Rated voltage EXIT 24 V | 12 - 24 V DC (-15 % / + 20 %) | | |
| Rated current AC/DC | 220 V = 20 mA,<br>110 V = 40 mA | 230 V ≃ 50 mA,<br>110 V ≃100 mA | 220 V = 20 mA,<br>110 V = 40 mA |
| Frequency | DC and 50 - 60 Hz (AC) | DC and 50 - 60 Hz (AC) | DC and 50 - 60 Hz (AC) |
| Charging duration for capacity > 90 % | | 24 h | |
| Power factor cos φ | ≥ 0.95 | ≃ 0.5 | ≥ 0.95 |
| Circuit | electronic power supply | electronic power supply | electronic power supply |
| Protection class | I | I | I |
| Rated luminous flux | 166 lm | 166 lm | 166 lm |
| Lamp / Illuminant | high output-LEDs, white | high output-LEDs, white | high output-LEDs, white |
| Rated emergency lighting duration | | approx. 3 h | |
| Dimensions (L x W x H) | 356 x 175 x 76 mm | 356 x 175 x 76 mm | 356 x 175 x 76 mm |
| Connecting terminals | 3 x loop terminal 2 x 2.5 mm² [1)] | 3 x loop terminal 2 x 2.5 mm² [1)] | 3 x loop terminal 2 x2.5 mm² [1)] |
| Enclosure colour | grey, RAL 7035 | grey, RAL 7035 | grey, RAL 7035 |
| Enclosure material | Polycarbonate | Polycarbonate | Polycarbonate |
| Weight | 2 kg | 2.5 kg | 2.2 kg |
| Cable glands / gland plates / enclosure drilling | 1 x Ex-e cable glands M20 x 1.5 (plastic) / 1 x Ex-e-screw plug M20 or 2 x M20 x1.5 metal thread, 1 x screw plug M20 | 1 x Ex-e cable glands M20 x 1.5 (plastic) / 1 x Ex-e-screw plug M20 or 2 x M20 x1.5 metal thread, 1 x screw plug M20 | 1 x Ex-e cable glands M20 x 1.5 (plastic) / 1 x Ex-e-screw plug M20 or 2 x M20 x1.5 metal thread, 1 x screw plug M20 |
| Type of mounting | wall/ceiling mounting | wall/ceiling mounting | wall/ceiling mounting |
| Degree of protection accd. to EN 60529 | IP66 | IP66 | IP66 |
| Protective cover / protective bowl | Polycarbonate | Polycarbonate | Polycarbonate |

[1)] Option: 3 x 4 mm² screw terminals

Eaton's Crouse-Hinds Business

# The safety you rely on.

See the complete offering of Hazardous and Industrial Products at www.crouse-hinds.de.


**U.S. (Global Headquarters): Eaton's Crouse-Hinds Business**

1201 Wolf Street
Syracuse, NY 13208

(866) 764-5454
FAX: (315) 477-5179
FAX Orders Only:
(866) 653-0640

CrouseCustomerCTR@Eaton.com


**For more information:**
If further assistance is required, please contact an authorized Eaton Distributor, Sales Office, or Customer Service Department.


**Australia**
Phone +61-2-8787-2777
Fax +61-2-9609-2342
crousehindsanz@eaton.com

**China**
Phone +86-21-2899-3600
Fax +86-21-2899-4055
ECHsales@eaton.com

**Great Britain**
Phone +44-247-630-89 30
Fax +44-247-630-10 27
sales5@eaton.com

**India**
Phone +91-124-4683888
Fax +91-124-4683899
cchindia@eaton.com

**Canada**
Toll Free +1-800-265-0502
Fax +1-800-263-9504
Fax orders only:
+1-866-653-0645

**Korea**
Phone +82-2-3484-6783
Fax +82-2-3484-6778
CCHK-sales@
cooperindustries.com

**Mexico/Latin America/ Caribbean**
Phone +52-555-804-4000
Fax +52-555-804-4020
mxmercadotecnia@
cooperindustries.com

**Spain**
Phone +34-9-37362710
Fax +34-9-37835055
sales.CCH.es@
cooperindustries.com

**Middle East (Dubai)**
Phone +971-4-427-2522 / 2500
Fax +971-4-429-8521
CHMEsales@Eaton.com

**The Netherlands**
Phone +31-10-2452145
Fax +31-10-2452121
CHRD_mail@Eaton.com

**Norway**
Phone +47-32-244600
Fax +47-32-244646
CHLIoffice@eaton.com

**Singapore:**
Phone +65-6645-9888
Fax +65-6297-4819
CHSI-Sales@Eaton.com

**Turkey**
Phone +90-216-464-20-20
Fax +90-216-464-20-10
infoEGTurkey@eaton.com

**Russia**
Phone +7-495 510-24-27
Fax +7-495 510-24-28
info@cooper.ru.com
www.cooper-russia.ru

**Eaton's Crouse-Hinds Business**
Neuer Weg – Nord 49
D-69412 Eberbach

Phone +49 (0) 6271/806-500
Fax +49 (0) 6271/806-476
E-mail info-ex@eaton.com
Internet www.crouse-hinds.de


Powering Business Worldwide


**Eaton**
1000 Eaton Boulevard
Cleveland, OH 44122
United States
Eaton.com



© 2018 Eaton Corporation
All Rights Reserved


Printed in Germany
Publication No. BR 300 8000
January 2018



Changes to the products, to the information contained in this document, and to prices are reserved; so are errors and omissions. Only order confirmations and technical documentation by Eaton is binding. Photos and pictures also do not warrant a specific layout or functionality. Their use in whatever form is subject to prior approval by Eaton. The same applies to Trademarks (especially Eaton, Moeller, and Cutler-Hammer). The Terms and Conditions of Eaton apply, as referenced on Eaton Internet pages and Eaton order confirmations.



**Eaton's Crouse-Hinds Business**
1201 Wolf Street
Syracuse, NY 13208
(866) 764-5454
CrouseCustomerCTR@Eaton.com



Eaton is a registered trademark.

All other trademarks are property of their respective owners.